PHILIPS

Lighting



MASTER LEDtube EM/Mains T8

MAS LEDtube 1200mm UO 18W 840 T8 RS

The Philips MASTER LEDtube integrates a LED light source into a traditional fluorescent form factor. Its unique design creates a perfectly uniform visual appearance which cannot be distinguished from traditional fluorescent. For those that are looking for value for money within limited budget and re-lamping efforts for better light effect and lifetime.

Product data

General Information	
Cap-Base	G13 [Medium Bi-Pin Fluorescent]
Main Application	Industrial
Nominal Lifetime (Nom)	50000 h
Switching Cycle	200000X
B50L70	50000 h

Light Technical	
Color Code	840 [CCT of 4000K]
Beam Angle (Nom)	160 °
Luminous Flux (Nom)	2500 lm
Luminous Flux (Rated) (Nom)	2500 lm
Rated Beam Angle	160 °
Correlated Color Temperature (Nom)	4000 K
Luminous Efficacy (rated) (Nom)	139 lm/W
Color Consistency	<6
Color Rendering Index (Nom)	83
LLMF At End Of Nominal Lifetime (Nom)	70 %

Operating and Electrical	
Input Frequency	50 to 60 Hz
Power (Rated) (Nom)	18 W
Lamp Current (Max)	82 mA
Lamp Current (Min)	75 mA
Starting Time (Nom)	0.5 s
Warm Up Time to 60% Light (Nom)	0.1 s
Power Factor (Nom)	0.9
Voltage (Nom)	220-240 V

Temperature	
T-Ambient (Max)	35 °C
T-Ambient (Min)	-20 °C
T-Storage (Max)	65 °C
T-Storage (Min)	-40 °C
T-Case Maximum (Nom)	55 °C

Controls and Dimming	
Dimmable	No

MASTER LEDtube EM/Mains T8

Mechanical and Housing	
Product Length	1200 mm

Approval and Application	
Energy Saving Product	Yes
Suitable For Accent Lighting	No
Energy Efficiency Label (EEL)	A++
Approval Marks	CE marking KEMA Keur certificate RoHS compliance
Energy Consumption kWh/1000 h	18 kWh

Product Data	
Full product code	871869646151800

Order product name	MAS LEDtube 1200mm UO 18W 840 T8 RS
EAN/UPC - Product	8718696461518
Order code	929001148902
Numerator - Quantity Per Pack	1
Numerator - Packs per outer box	10
Material Nr. (12NC)	929001148902
Net Weight (Piece)	0.270 kg

Warnings and Safety

- NOTES: The overall energy efficiency and light distribution of any installation that uses these lamps are determined by the design of the installation.

Dimensional drawing

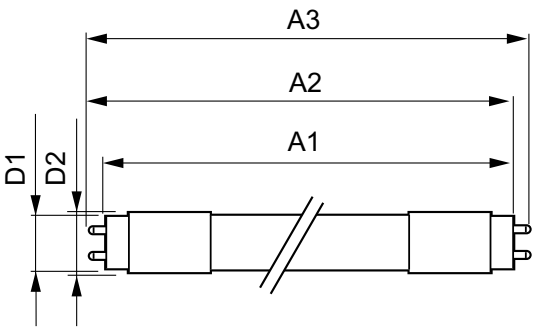

LEDtube 1200mm UO 20W 840 T8 ROT

Product	D1	D2	A1	A2	A3
MAS LEDtube 1200mm UO 18W 840 T8 RS	25.7 mm	28 mm	1198 mm	1205 mm	1212 mm

Photometric data

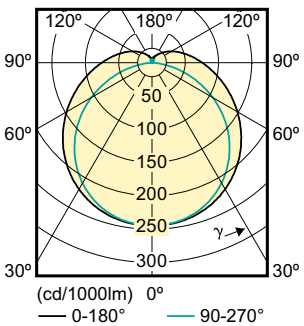

LEDtube 1200 mm UO, 1500 mm UO, 1800 mm T8 ROT

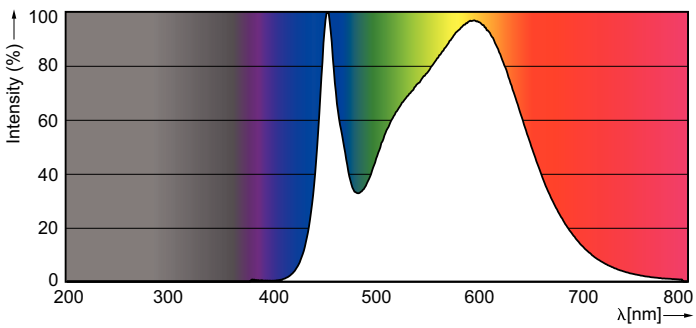

LEDtube 1200 mm UO 20 W /840 T8 ROT



© 2018 Philips Lighting Holding B.V. All rights reserved. Philips Lighting reserves the right to make changes in specifications and/or to discontinue any product at any timewithout notice or obligation and will not be liable for any consequences resulting from the use of this publication.

www.lighting.philips.com
2018, July 23 - data subject to change