

HF-Performer III for TL-D lamps

HF-P 136 TL-D III 220-240V 50/60Hz IDC

HF-Performer III TL-D III ballasts offer maximum versatility and meet all of the necessary commercial grade specifications. They also offer the added benefits of lamp striation reduction technology, making these ballasts compatible with energy-saving lamps. As such, these ballasts are part of an overall high-efficiency lighting system that may help you or your customers to achieve any international or local energy code you need to comply with. HF-Performer III TL-D III ballasts are the ideal choice for a broad range of new construction and retrofit applications within the commercial sector, including general surface mounting or office lighting, parking garages, warehouses, waterproof and other applications.

Product data

• General Information

Application Code	III
Type Version	IDC
Lamp Type	TL-D
Number Of Lamps	1 piece/unit
Number Of Products On MCB (16A Type B) (Nom)	28
Automatic Restart	Yes

• Operating and Electrical

Input Voltage	220 to 240 V
Input Frequency	50 to 60 Hz
Operating Frequency (Nom)	45 kHz
Ignition Method	Programmed Start
Crestfactor (Max)	1.7
Power Factor 100% Load (Nom)	0.98
Ignition Time (Max)	0.9 s
Mains Voltage Performance (AC)	-8%-+6%
Mains Voltage Safety (AC)	-10%-+10%
Earth Leakage Current (Nom)	0.5 mA
Inrush Current Width	0.25 ms
Constant Wattage Deviation	-2%/+2%
Ballast Factor (Nom)	1
Power Losses (Nom)	3.5 W
Inrush Current Peak (Max)	18 A

• Wiring

Connector Type Input Terminals	WAGO 251 universal connector [Suitable for both automatic wiring (ALF and ADS) and manual wiring]
Cable Capacity Output Wires Mutual (Nom)	200 pF
Connector Type Output Terminals	WAGO 251 universal connector [Suitable for both automatic wiring (ALF and ADS) and manual wiring]
Cable Length Hot Wiring	0.75 m
Wire Striplength	8.0-9.0 mm
Dual Fixture Master/ Slave	Not applicable [Master/Slave oper. not applicable]
Input Terminal Cross Section	0.50-1.00 mm²
Output Terminal Cross Section	0.50-1.00 mm²
Cable Capacity Output Wires To Earth (Nom)	200 pF

• System characteristics

Rated Ballast-Lamp Power	36 W

PHILIPS

HF-Performer III for TL-D lamps

Rated Lamp Power On TL-D	36 W
System Power On TL-D	36 W
Lamp Power On TL-D	32.5 W
Power Loss On TL-D	3.5 W

- Temperature

T-Ambient (Max)	60 °C
T-Ambient (Min)	-25 °C
T-Storage (Max)	50 °C
T-Storage (Min)	-40 °C
T-Case Lifetime (Nom)	80 °C
T-Case Maximum (Max)	80 °C
T-Ignition (Max)	60 °C
T-Ignition (Min)	-25 °C

- Mechanical and Housing

Housing	L 280x30x28

- Emergency Operation

Nominal Light Output After 60 Seconds	100% of EBLF
Battery Voltage Lamp Ignition	186-275 V
Normal Operating Voltage (DC)	220-240 V
Battery Voltage Lamp Operation	186-275
Battery Voltage Guaranteed Operation	176-275 V
Battery Voltage Guaranteed Ignition	186-275 V
Emergency Ballast Lumen Factor (EBLF) (Nom)	0.7 %
Nominal Light Output After 5 Seconds	50% of EBLF

- Approval and Application

Energy Efficiency Index	A2 BAT
EMI 9 kHz ... 30 MHz	EN55015
EMI 30 MHz ... 1000 MHz	Level = Class
Safety Standard	IEC 61347-2-3
Performance Standard	IEC 60929
Quality Standard	ISO 9000:2000
Environmental Standard	ISO 14001
Harmonic Current Emission Standard	IEC 61000-3-2
EMC Immunity Standard	IEC 61547
Vibration Standard	IEC 68-2-6 Fc
Bumps Standard	IEC 68-2-29 Eb
Humidity Standard	EN 61347-2-3 clause 11
Approval Marks	CE marking ENEC certificate VDE-EMV certificate
Temperature Marking	Yes
Emergency Standard	IEC 60598-2-22
Hum And Noise Level	< 30 dB(A)

- Product Data

Full product code	872790091164000
Order product name	HF-P 136 TL-D III 220-240V 50/60Hz IDC
EAN/UPC - Product	8711500999641
Order code	91164000
Numerator - Quantity Per Pack	1
Numerator - Packs per outer box	12
Material Nr. (12NC)	913713031566
Net Weight (Piece)	0.202 kg

Dimensional drawing

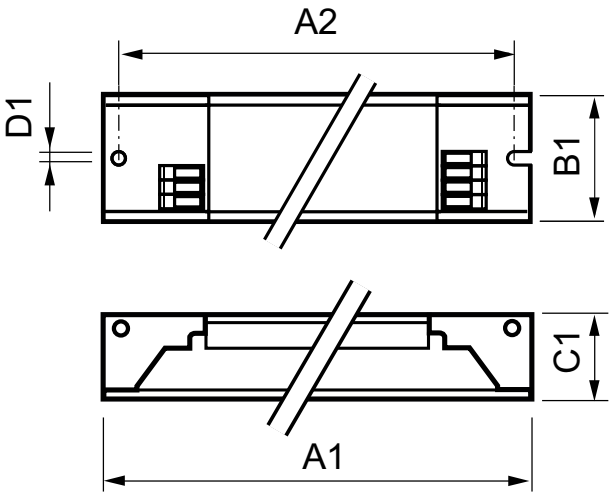

HF-P 136 TL-D III 220-240V 50/60Hz IDC

Product	D1	C1	A1	A2	B1
HF-P 136 TL-D III 220-240V 50/60Hz IDC	4.2 mm	28.0 mm	280.0 mm	265.0 mm	30.0 mm

HF-Performer III for TL-D lamps

Dimensional drawing

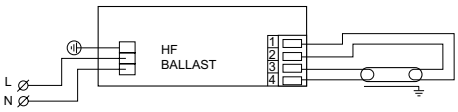

Photometric data

Ballast type	Lamp type	Lamp power		Ta = 40°C	Ta = 50°C	Ta = 60°C	Ta = 70°C
HF-P 136 TL-D III 220-240V 50/60Hz	TL-D General	36W	Tc	=55°C	=65°C	=73°C	X
			Lifetime	100,000 Hrs	100,000 Hrs	80,000 Hrs	X

© 2016 Philips Lighting Holding B.V.
All rights reserved.

Specifications are subject to change without notice. Trademarks are the property of Koninklijke Philips N.V. (Royal Philips) or their respective owners.

www.philips.com/lighting

2016, April 8
data subject to change